ARK
Room 1303-4,13/F, Block A, Seaview Estate, 2 Watson Road, North Point Hong Kong T 26336383 F 26330933

SPECIFICATION OF TYPICAL UNIT KITCHEN FITMENTS

PROJECT:	7-9 PING LAN STREET, AP LEI CHAU
CLIENT:	WANG ON
JOB NO:	I215
DATE:	20250021
REVISION:	

ARK
Room 1303-4,13/F, Block A, Seaview Estate, 2 Watson Road, North Point Hong Kong T 26336383 F 26330933

KITCHEN FITMENT SCHEDULE	**Project:** 7-9 PING LAN STREET, AP LEI CHAU **Client:** WANG ON **Job No:** I215 **Date:** 20250221

KITCHEN FITMENT CODE: KF-01

SUPPLIER: Massford (HK) Limited **CONTACT:** Christopher Chu **T:** (852) 2891 6860 **F:** (852) 2834 3029 **E:** Christopherchu@massford.com	**ITEM:** SINK MIXER **ORIGIN:** - **MODEL**: "HANSGROHE" TALIS M54 72845-140 DECK MOUNTED SINGLE LEVER SINK MIXER WITH PULL-OUT SPRAY **COLOR:** BRUSHED BRONZE **DIMENSION:** AS SHOWN **FINISH**: COLOR 140 PVD **WSD NO.:** C20201013 **WELS NO.:** TM21-0055

LOCATION: KITCHEN

REMARK: SUPPLIER SHALL SUPPLEMENT FLOW RATE, TEXT REPORT SHOWING TEXTED FLOW RATE UNDER DIFFERENT PRESSURE AND WSD WELs CERTIFICATE.

Product Image:

hansgrohe

Supplier should submit samples or equivalent for Designer approval before ordering/ construction. Contractor to check and verify materials delivery schedule. All sanitary accessories should be included .

.

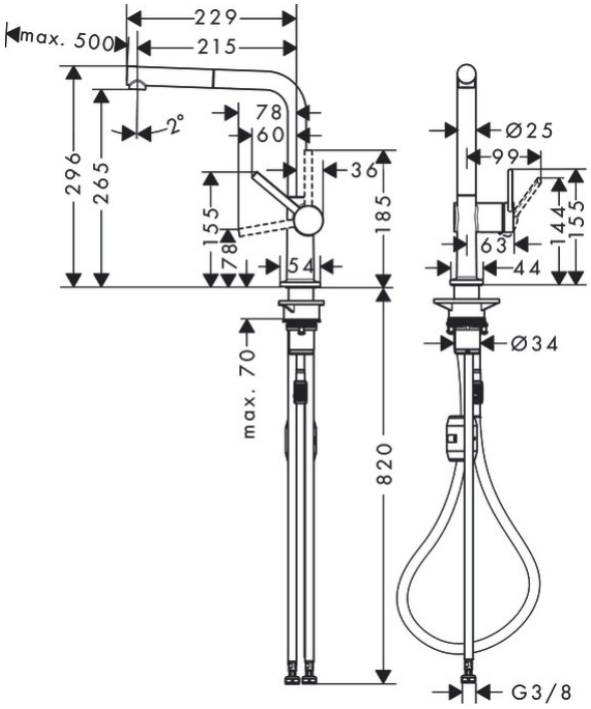

Revision	Date	Revision	Date
A	20230630		

ARK
Room 1303-4,13/F, Block A, Seaview Estate, 2 Watson Road, North Point Hong Kong T 26336383 F 26330933

KITCHEN FITMENT SCHEDULE	**Project:** 7-9 PING LAN STREET, AP LEI CHAU **Client:** WANG ON **Job No:** I215 **Date:** 20250221

KITCHEN FITMENT CODE: KF-02

SUPPLIER: Yick Hung Industrial Ltd **CONTACT:** Mr. Lan Wang Kei **T:** (852) 2736 3330 / 9037 9082 **F:** - **E:** yhind@yhind.imsbiz.com.hk	**ITEM:** KITCHEN SINK **ORIGIN:** - **MODEL**: CUSTOM MADE UNDER COUNTER KITCHEN SINK w/ OVERFLOW & WASTE (MODEL R10-HM3939) **COLOR:** - **DIMENSION:** clear 450 x 450 x 200 mm **FINISH**: SATIN, 304 S/S FINISH **DESCRIPTION:** -

LOCATION: KITCHEN

Product Image:

Supplier should submit samples or equivalent for Designer approval before ordering/ construction. Contractor to check and verify materials delivery schedule. All sanitary accessories should be included .

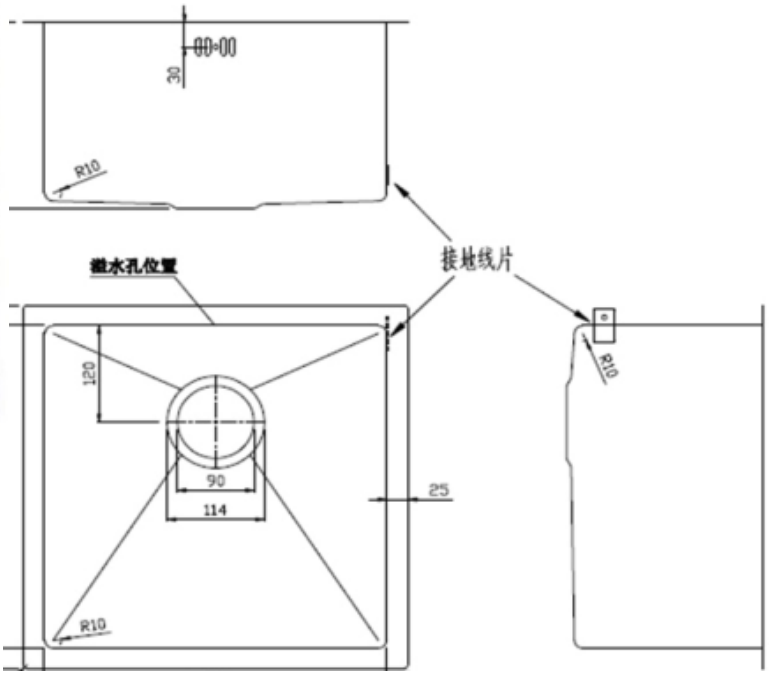

Revision	Date	Revision	Date

ARK
Room 1303-4,13/F, Block A, Seaview Estate, 2 Watson Road, North Point Hong Kong T 26336383 F 26330933

KITCHEN FITMENT SCHEDULE	**Project:** 7-9 PING LAN STREET, AP LEI CHAU **Client:** WANG ON **Job No:** I215 **Date:** 20250221

KITCHEN FITMENT CODE: KF-03

SUPPLIER: DM **CONTACT:** Patrick Kwong **T:** -852 9642 5192 **F:** - **E:** -patrick@dmleben.com	**ITEM:** Metal Slot **ORIGIN:** - **MODEL:** Kumeis **COLOR:** Black **DIMENSION:** As Shown **FINISH:** Black Matt powder coating **DESCRIPTION:** -

LOCATION: KITCHEN

Product Image:

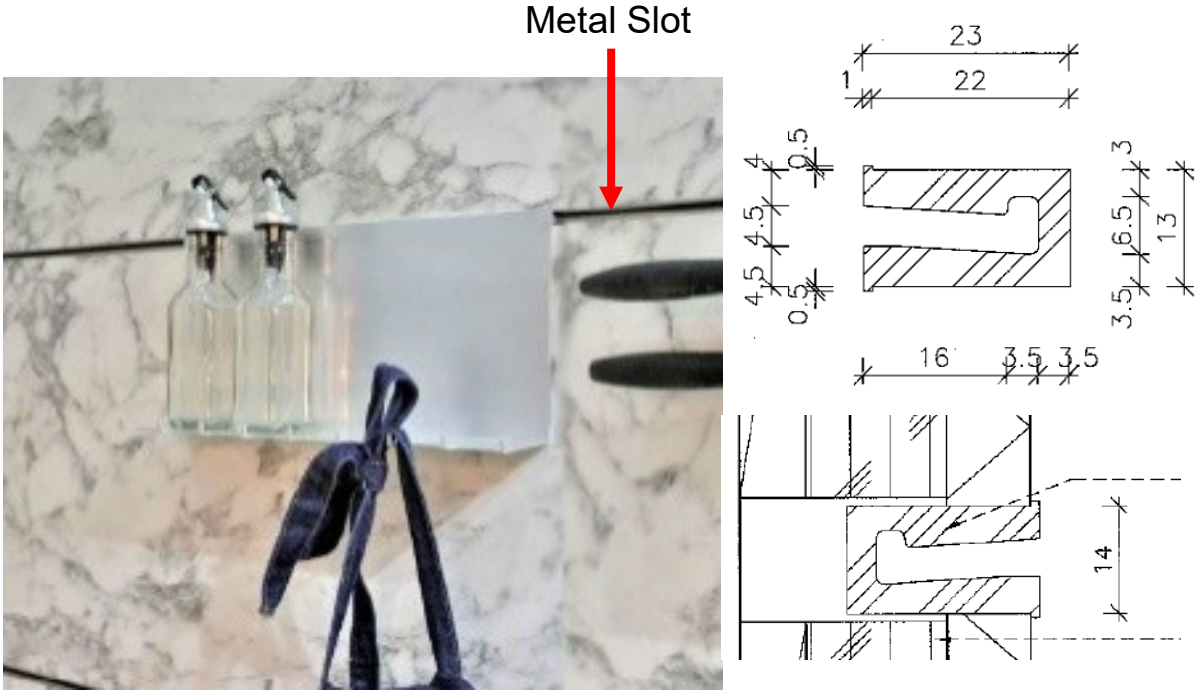

Revision	Date	Revision	Date

TENDER QUERY 03

ARK

Room 1303-4,13/F, Block A, Seaview Estate, 2 Watson Road, North Point Hong Kong T 26336383 F 26330933

KITCHEN FITMENT SCHEDULE	**Project:** 7-9 PING LAN STREET, AP LEI CHAU **Client:** WANG ON **Job No:** I215 **Date:** 20250516

KITCHEN FITMENT CODE: KF-04

SUPPLIER: DM **CONTACT:** Patrick Kwong **T:** -852 9642 5192 **F:** - **E:** -patrick@dmleben.com	**ITEM:** Kitchen Accessories **ORIGIN:** - **MODEL:** - Kumeis **COLOR:** - As Shown **DIMENSION:** - As Shown **FINISH:** - As Shown **DESCRIPTION:** - As Shown

LOCATION: KITCHEN (ALL ITEMS INCLUDED AS 1 SET FOR EACH TYP. & SU KITCHEN)

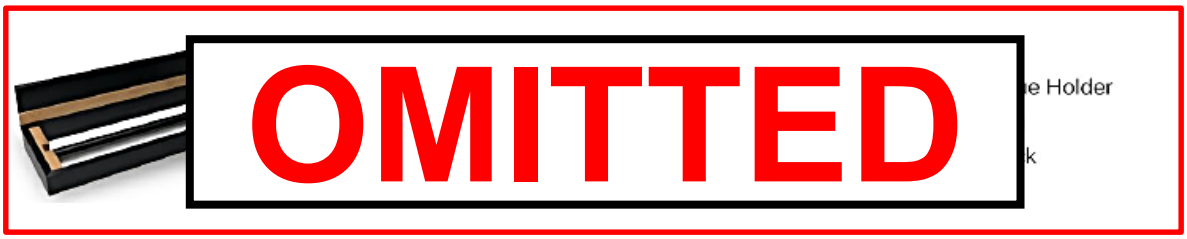

Model : KU205
Description : Magnetic Spice Bottle Holder
Dimension : 455W * 100D * 59H mm
Alu. Finish : Silky Black or Spray Black
Wood Finish: Walnut or Bamboo

Model : KU206
Description : Twin Hook
Dimension : 60W * 35D * 65H mm
Alu. Finish : Silky Black or Spray Black
Wood Finish: Walnut or Bamboo

Revision	Date	Revision	Date
A	20250516		

TENDER QUERY 03

ARK

Room 1303-4,13/F, Block A, Seaview Estate, 2 Watson Road, North Point Hong Kong T 26336383 F 26330933

KITCHEN FITMENT SCHEDULE	**Project:** 7-9 PING LAN STREET, AP LEI CHAU **Client:** WANG ON **Job No:** I215 **Date:** 20250516

KITCHEN FITMENT — CODE: KF-05

SUPPLIER: Hong Kong Hardware **CONTACT:** Mr. Gary Tsoi **T:** (852) 2511 7661 **F:** - **E:** gary@hkhardware.com.hk	**ITEM:** WASTE BIN **ORIGIN:** - **MODEL:** - **COLOR:** STAINLESS STEEL, BLACK **DIMENSION:** 388 x 203 x 420MM **FINISH:** - **DESCRIPTION:** -

LOCATION: KITCHEN (1 SET FOR EACH TYP. & SU KITCHEN)

Product Image:

Supplier should submit samples or equivalent for Designer approval before ordering/ construction. Contractor to check and verify materials delivery schedule. All sanitary accessories should be included .

Hailo

DESCRIPTION

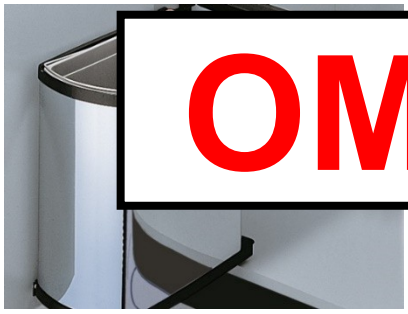

OMITTED

ewall

ÖKO FLEX

Hailo AS Uno 18 Edelstahl/schwarz

3418101

GTIN: 4007126341815

For hinged door cabinets from 450 mm width

SWING 1 BUCKET 18 l TOTAL

FOR CABINET WIDTH:

45 50 60 cm

SKETCHES

Cabinet-width min. (cm)	45
Cabinet-width max. (cm)	60
available Cabinet-depth min. (mm)	199
Sidewall mounted	yes
Product dimensions (WxDxH) (mm)	388 x 203 x 420
Packing dimensions (WxDxH) (mm)	395 x 206 x 405
Number of bins	1
Lid	Lid with turn & tilt mechanism
Total volume (l)	18
Color metal parts	stainless steel
Color plastic parts	black
Weight incl. packing (kg)	3,1

Revision	Date	Revision	Date
A	20250516		

TENDER QUERY 03

ARK

Room 1303-4,13/F, Block A, Seaview Estate, 2 Watson Road, North Point Hong Kong T 26336383 F 26330933

KITCHEN FITMENT SCHEDULE	**Project:** 7-9 PING LAN STREET, AP LEI CHAU **Client:** WANG ON **Job No:** I215 **Date:** 20250516

KITCHEN FITMENT — CODE: KF-06

SUPPLIER: Hong Kong Hardware **CONTACT:** Mr. Gary Tsoi **T:** (852) 2511 7661 **F:** - **E:** gary@hkhardware.com.hk	**ITEM:** Folding Ladder **ORIGIN:** **MODEL:** HAILO HKH-749B **COLOR:** As Shown **DIMENSION:** As Shown

LOCATION: KITCHEN (1 SET FOR EACH TYP. & SU KITCHEN)

Product Image:

Supplier should submit samples or equivalent for Designer approval before ordering/ construction. Contractor to check and verify materials delivery schedule. All accessories should be included .

HKH-749B

Folding Stepfix ladder III with universal bracket, loading max. 150 kg

第三代摺疊梯連收櫃內側吊掛碼，載重不超過 150 公斤

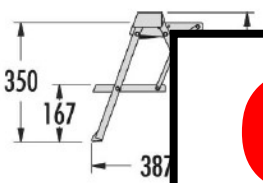

OMITTED

H mm
H mm

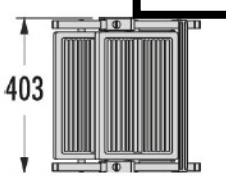

Easily unlocked and folded with one hand
可單手解鎖並把梯摺疊起來

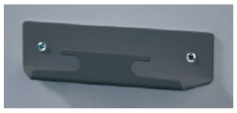

Universal bracket, dark grey
深灰色吊掛碼

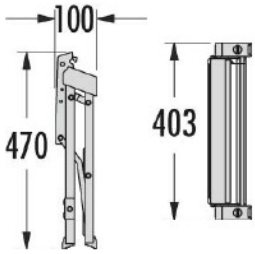

Revision	Date	Revision	Date
A	20250516		

TENDER QUERY 03

ARK

Room 1303-4,13/F, Block A, Seaview Estate, 2 Watson Road, North Point Hong Kong T 26336383 F 26330933

KITCHEN FITMENT SCHEDULE

Project: 7-9 PING LAN STREET, AP LEI CHAU
Client: WANG ON
Job No: I215
Date: 20250516

KITCHEN FITMENT

CODE: KF-07

SUPPLIER: MAXGRAND LIMITED
CONTACT: Mr. Henry Wong
T: 3927 6322 / 6090 6607
F:
E: Henry.wong@maxgrand.com.hk

ITEM: **LED Light Strip with diffuser and motion sensor switch,** LIA-ICXS Driver K1215E

ORIGIN: -
MODEL: UNIA-2CXB-S, IP20
COLOR: 6W DC12V /m 3000K LED
DIMENSION: Refer To Kitchen Drawing

LOCATION: KITCHEN

Product Image:

Supplier should submit samples or equivalent for Designer approval before ordering/ construction. Contractor to check and verify materials delivery schedule. All lighting should be included .

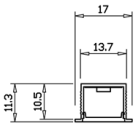

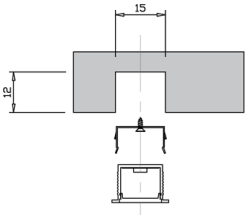

Brand	UNICO
Code	UNIA - 1CXB Black UNIA - 2CXB-S Black w/. Motion sensor switch UNIA - 1CXS Silver UNIA - 2CXS-S Silver w/. Motion sensor switch
Profile materials	Aluminum , PMMA diffuser, plastic end caps
Color temperature	3000K
LED strip	Flexible LED strip 120 LED chips / meter
Switch	Built- in motion sensor available
Output	6W DC 12V / meter
Max. length	3 meter
Origin	China
IP Rating	IP20

Brand	UNICO
Code	K1215E
Output	12V dc 15W Max
Input	100 – 240V AC 50/60 Hz
Output mode	Constant voltage
Origin	China

Revision	Date	Revision	Date
A	20250516		

Features:

TENDER QUERY 03

ARK

Room 1303-4,13/F, Block A, Seaview Estate, 2 Watson Road, North Point Hong Kong T 26336383 F 26330933

KITCHEN FITMENT SCHEDULE	**Project:** 7-9 PING LAN STREET, AP LEI CHAU **Client:** WANG ON **Job No:** I215 **Date:** 20250516

KITCHEN FITMENT CODE: KF-07A

SUPPLIER: Unico-600 Limited **CONTACT:** Mr. Freddie Lau **T:** (852) 2152 1738 / 9608 0008 **F:** **E:** info@unico6000.com	**ITEM:** UNICO' UNIA-2CXS-MS BLACK with moition sensor switch, LIA-ICXS Driver K1215E **ORIGIN:** - **MODEL**: ML-SFR-F23B-HB-HO **COLOR:** 9W/m 3000K 24V LED **DIMENSION:** Refer To Kitchen Drawing

LOCATION: SHOE CABINET/ STORAGE CABINET

Product Image:

Supplier should submit samples or equivalent for Designer approval before ordering/ construction. Contractor to check and verify materials delivery schedule. All lighting should be included .

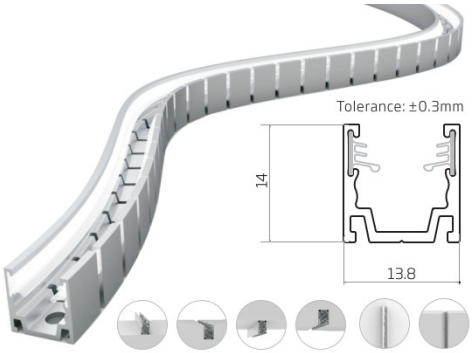

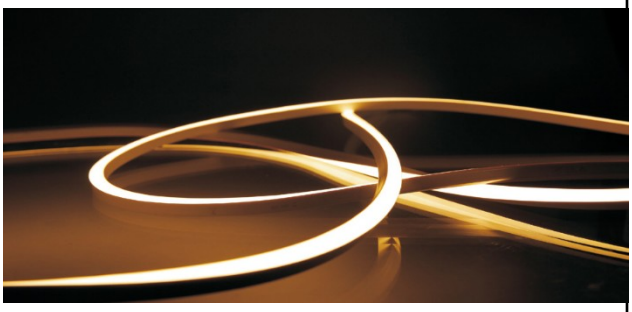

Horizontal Bending (Silicone)

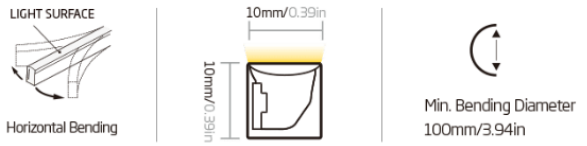

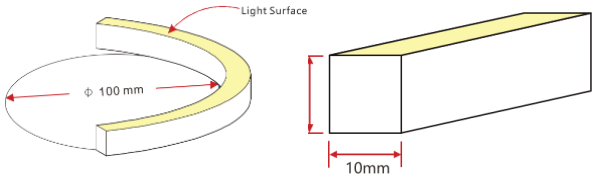

ClearTech™ TwinFlex™ C-Mask™ PinBoost™ V-Optic™

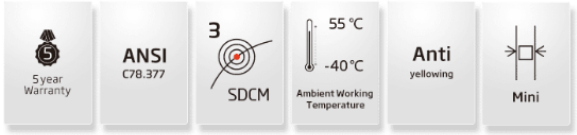

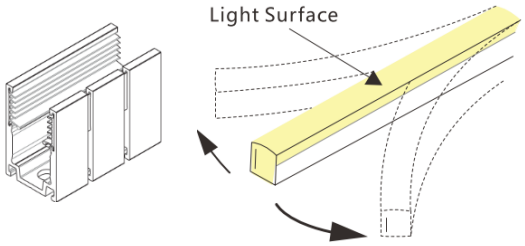

Revision	Date	Revision	Date
A	20250516		

Features:

TENDER QUERY 03

ARK

Room 1303-4,13/F, Block A, Seaview Estate, 2 Watson Road, North Point Hong Kong T 26336383 F 26330933

KITCHEN FITMENT SCHEDULE

Project: 7-9 PING LAN STREET, AP LEI CHAU
Client: WANG ON
Job No: I215
Date: 20250516

KITCHEN FITMENT

CODE: KF-08

SUPPLIER: Kitchen Highlights Ltd
CONTACT: Man Tse
T: 2363 1733 / 9770 5717
F: -
E: mantse@kitchenhighlights.com

ITEM: Kitchen Accessories Shelf
ORIGIN:
MODEL: Damiano Latini GRID
COLOR: Black
DIMENSION: As Shown
FINISH: Black Matt powder coating
DESCRIPTION: -

LOCATION: KITCHEN (ALL ITEMS INCLUDED AS 1 SET FOR EACH TYP. & SU KITCHEN)

Product Image:

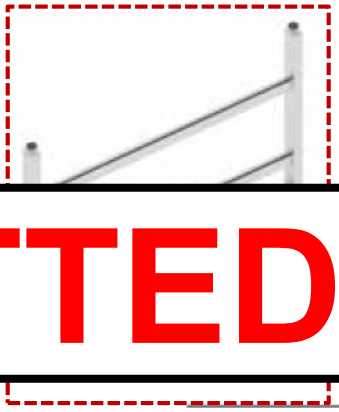

STRUTTURA
STRUCTURE

OMITTED

GRID TIPO A 560 X 600

Kg.	1.27
L - cm.	60.00
H - cm. (min-max)	66.00 - 69.00
P - cm.	12.00
X - cm.	23.40 - 24.90
X1 - cm.	15.60

Mensola
Shelf
Pag. 325

Porta calici
Glass holder
Pag. 324

Portarotolo
Roll holder
Pag. 324

Gancio
Hook
Pag. 325

Gancio
Hook
Pag. 325

Revision	Date	Revision	Date
A	20250516		

Features:

ARK
Room 1303-4,13/F, Block A, Seaview Estate, 2 Watson Road, North Point Hong Kong T 26336383 F 26330933

KITCHEN FITMENT SCHEDULE	**Project:** 7-9 PING LAN STREET, AP LEI CHAU **Client:** WANG ON **Job No:** I215 **Date:** 20250221

KITCHEN FITMENT CODE: KF-08A

SUPPLIER: Hong Kong Hardware **CONTACT:** Mr. Gary Tsoi **T:** (852) 2511 7661 **F:** - **E:** gary@hkhardware.com.hk	**ITEM:** shoe rack fitting for shoe cabnet **ORIGIN:** **MODEL**: 892 14 742 **COLOR:** As Shown **DIMENSION:** As Shown

LOCATION: STORAGE CABINET & SHOE CABINET

Product Image:

Supplier should submit samples or equivalent for Designer approval before ordering/ construction. Contractor to check and verify materials delivery schedule. All accessories should be included .

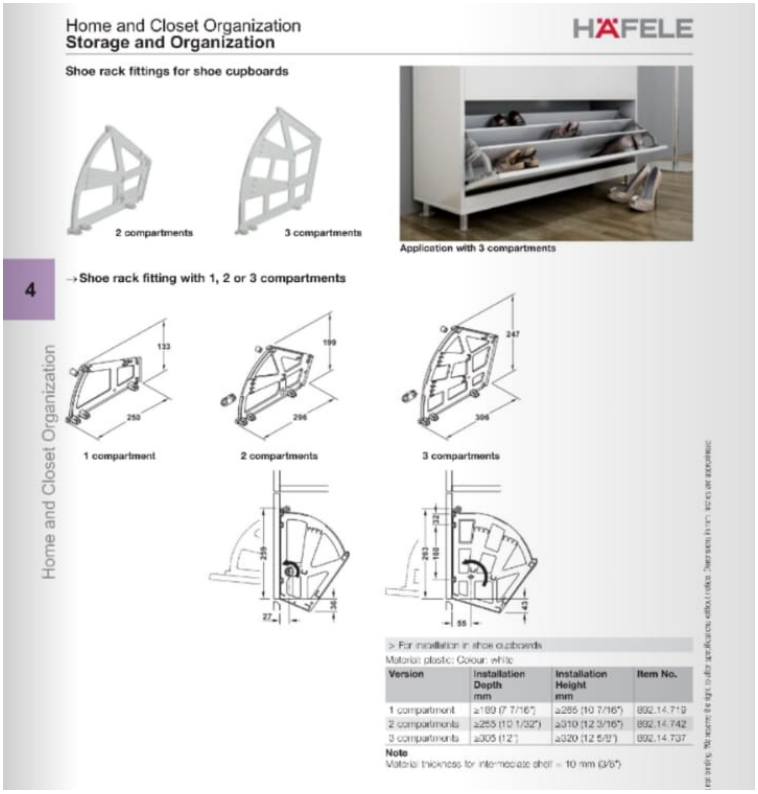

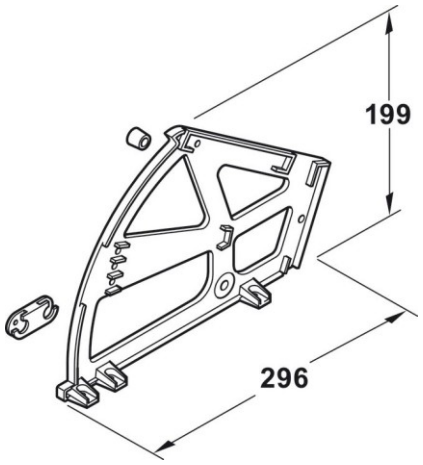

Revision	Date	Revision	Date

TENDER QUERY 03

ARK

Room 1303-4,13/F, Block A, Seaview Estate, 2 Watson Road, North Point Hong Kong T 26336383 F 26330933

KITCHEN FITMENT SCHEDULE	**Project:** 7-9 PING LAN STREET, AP LEI CHAU **Client:** WANG ON **Job No:** I215 **Date:** 20250516

KITCHEN FITMENT	CODE: KF-09
SUPPLIER: Hong Kong Hardware **CONTACT:** Mr. Gary Tsoi **T:** (852) 2511 7661 **F:** - **E:** gary@hkhardware.com.hk	**ITEM:** Cutlery tray for kitchen cabinet **ORIGIN:** **MODEL:** T54 **COLOR:** As Shown **DIMENSION:** As Shown

LOCATION: ALL KITCHEN

Product Image:

Supplier should submit samples or equivalent for Designer approval before ordering/ construction. Contractor to check and verify materials delivery schedule. All accessories should be included .

Revision	Date	Revision	Date
A	20250516		

ARK
Room 1303-4,13/F, Block A, Seaview Estate, 2 Watson Road, North Point Hong Kong T 26336383 F 26330933

KITCHEN FITMENT SCHEDULE	**Project:** 7-9 PING LAN STREET, AP LEI CHAU **Client:** WANG ON **Job No:** I215 **Date:** 20250221

KITCHEN FITMENT CODE: KF-10

SUPPLIER: Hong Kong Hardware **CONTACT:** Mr. KK Tse **T:** (852) 2511 7661 / 9481 7903 **F:** - **E:** gary@hkhardware.com.hk	**ITEM:** Sliding tray for kitchen base cabinet **MODEL**: T54 **COLOR:** As Shown **DIMENSION:** As Shown

LOCATION: ALL KITCHEN

Product Image:

Supplier should submit samples or equivalent for Designer approval before ordering/ construction. Contractor to check and verify materials delivery schedule. All accessories should be included .

Made in Italy
意大利製造

ViBO

SIDE PULL-OUTS FOR BASE UNITS

3D door adjustment
面板 3 維調節

Fast door installation
面板安裝簡便快捷

Essence series 2-tier side-mounted pull-out unit with baskets in 5 mm thick smoked glass sides, ABS bottom, matt dark grey finish and 2 sides with stainless steel bottom edge for 150 mm width base cabinet
Essence 系列 2 層地櫃儲物側拉架，配 5 mm 厚煙灰玻璃圍欄、深灰色樹脂底板及不銹鋼底圍邊籃，150 mm 寬櫃體適用

Model No. 型號	Size 尺寸 (mm)			For Cabinet Width 適用櫃體寬度 (mm)
	W 闊	D 深	H 高	
HVB-B15/2E/L	110	476	514	150

- Loading 承重 : 30 kg
- Finish 顏色 : Matt dark grey 深灰
- Non-reversible, available in left side only 左式
- Equipped with full extension slides with dampened return
  配有全拉伸滑軌帶緩衝自關
- Fast slide and door installation
  滑軌及面板安裝簡便快捷
- Available with 3-way adjustable door brackets
  附有可調節面板 3 維的扣碼

Fast slide installation
滑軌安裝簡便快捷

Revision	Date	Revision	Date

ARK
Room 1303-4,13/F, Block A, Seaview Estate, 2 Watson Road, North Point Hong Kong T 26336383 F 26330933

KITCHEN FITMENT SCHEDULE

Project: 7-9 PING LAN STREET, AP LEI CHAU
Client: WANG ON
Job No: I215
Date: 20250221

KITCHEN FITMENT

CODE: KF-11

SUPPLIER: Hong Kong Hardware
CONTACT: Mr. KK Tse
T: (852) 2511 7661 / 9481 7903
F: -
E: gary@hkhardware.com.hk

ITEM: Sliding track for Dining table
MODEL: ATIM - Cocktail
COLOR: As Shown
DIMENSION: As Shown

LOCATION: STUDIO FLAT KITCHEN

Product Image:

Supplier should submit samples or equivalent for Designer approval before ordering/ construction. Contractor to check and verify materials delivery schedule. All accessories should be included .

Cocktail

TAVOLO ESTRAIBILE DA CASSETTO
PULL-OUT DRAWER TABLE

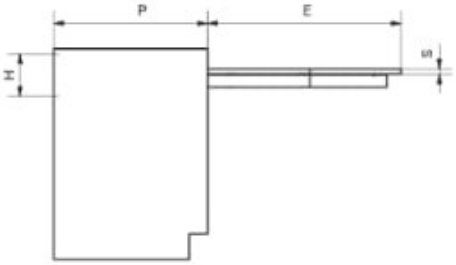

CODICE CODE	M	P min	H min	S1	E	Z min	S min	SILENT
411/78.1155.22 E	450	540	120	15/20	753	405	16	78.1155.22 E
411/78.1150.22 E	600	540	120	15/20	753	555	16	78.1150.22 E
411/78.1160.22 E	900	540	120	15/20	753	855	16	78.1160.22 E
411/78.1170.22 E	1200	540	120	15/20	753	1155	16	78.1170.22 E

Revision	Date	Revision	Date

ARK
Room 1303-4,13/F, Block A, Seaview Estate, 2 Watson Road, North Point Hong Kong T 26336383 F 26330933

KITCHEN FITMENT SCHEDULE

Project: 7-9 PING LAN STREET, AP LEI CHAU
Client: WANG ON
Job No: I215
Date: 20250221

KITCHEN FITMENT CODE: KF-12

SUPPLIER: Hong Kong Hardware
CONTACT: Mr. KK Tse
T: (852) 2511 7661 / 9481 7903
F: -
E: gary@hkhardware.com.hk

ITEM: Sliding track for Upper Tray
MODEL: EKU-FORTE 170/340
HKS-2706A
COLOR: As Shown
DIMENSION: As Shown

LOCATION: KITCHEN CABINET

Product Image:

EKU Swiss Gliding Solutions

Supplier should submit samples or equivalent for Designer approval before ordering/ construction. Contractor to check and verify materials delivery schedule. All accessories should be included .

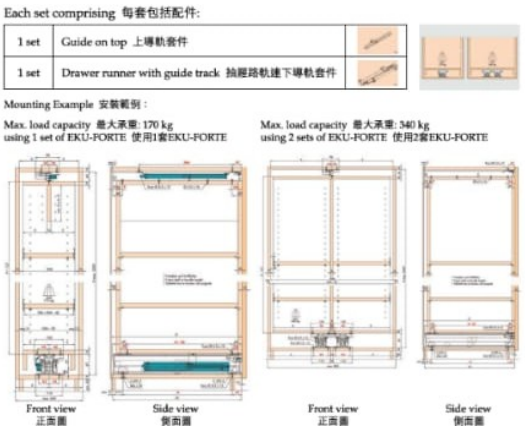

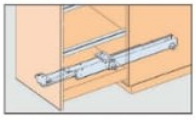

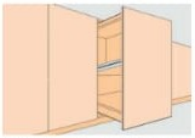

Tall unit extension comfort without any visible technology thanks to the base mounting system
高身拉籃式收納五金配件安裝於櫃體頂板背面、底板上面及拉籃頂板上面、底板背面，隱藏不見，外觀整潔

Model No. 型號	Installation Depth 櫃體內深尺寸 (LT)	Extension Length (關閉時)軌道長度 (LA)	Travel 滑動距離	A 軌道安裝間距
HKS-2706/480	485	480	452	400
HKS-2706/530	535	530	502	450
HKS-2706A	585	580	552	500
HKS-2706B	685	680	652	600
HKS-2706C	885	880	852	800
HKS-2706D	1085	1080	1052	1000

Revision	Date	Revision	Date